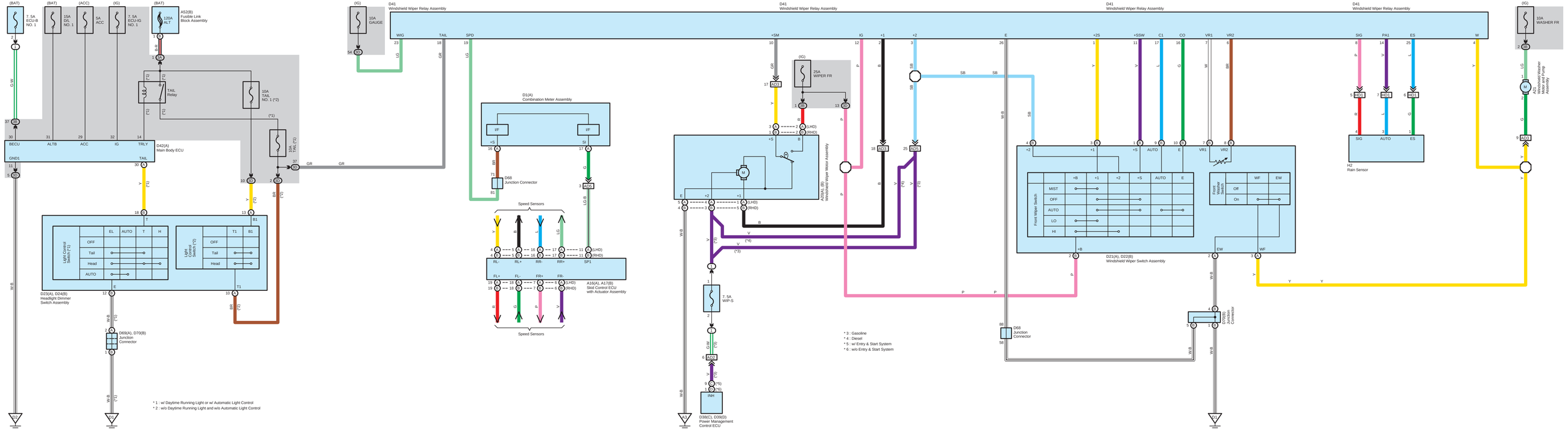

(BAT)
7. 5A ECU-B NO. 1
(BAT)
15A DIL NO. 1
(ACC)
5A ACC
(IG)
7. 5A ECU-IG NO. 1
(BAT)
120A ALT
A52(B) Fusible Link Block Assembly
TAIL Relay
10A TAIL NO. 1 (*2)
10A TAIL (*1)
D42(A) Main Body ECU
BECU
ALTB
ACC
IG
TRLY
GND1
TAIL
Light Control Switch (*1)
EL
AUTO
T
H
OFF
Tail
Head
AUTO
Light Control Switch (*2)
T1
B1
OFF
Tail
Head
D23(A), D24(B) Headlight Dimmer Switch Assembly
D69(A), D70(B) Junction Connector
* 1 : w/ Daytime Running Light or w/ Automatic Light Control
* 2 : w/o Daytime Running Light and w/o Automatic Light Control
(IG)
10A GAUGE
D41 Windshield Wiper Relay Assembly
WIG
TAIL
SPD
D1(A) Combination Meter Assembly
I/F
I/F
D68 Junction Connector
Speed Sensors
RL-
RL+
RR-
RR+
SP1
FL+
FL-
FR+
FR-
A16(A), A17(B) Skid Control ECU with Actuator Assembly
Speed Sensors
(IG)
25A WIPER FR
A20(A), (B) Windshield Wiper Motor Assembly
7. 5A WIP-S
D38(C), D39(D) Power Management Control ECU
INH
* 3 : Gasoline
* 4 : Diesel
* 5 : w/ Entry & Start System
* 6 : w/o Entry & Start System
D68 Junction Connector
D21(A), D22(B) Windshield Wiper Switch Assembly
Front Wiper Switch
MIST
OFF
AUTO
LO
HI
Front Washer Switch
Off
On
D70(B) Junction Connector
(IG)
10A WASHER FR
A21 Windshield Washer Motor and Pump Assembly
H2 Rain Sensor